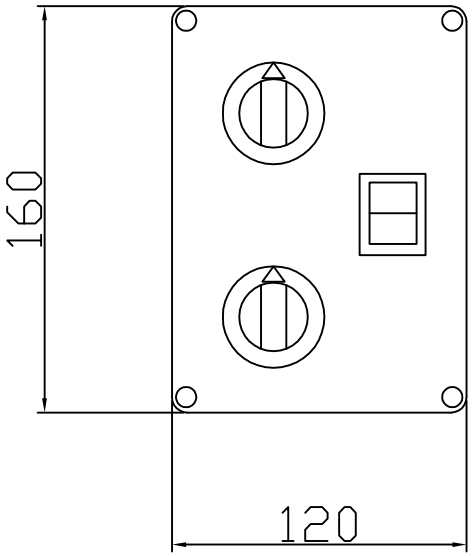

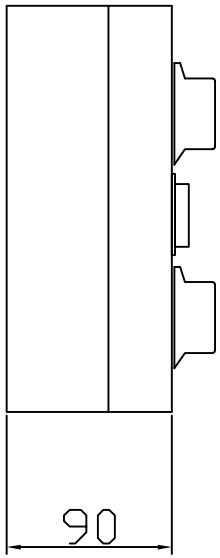

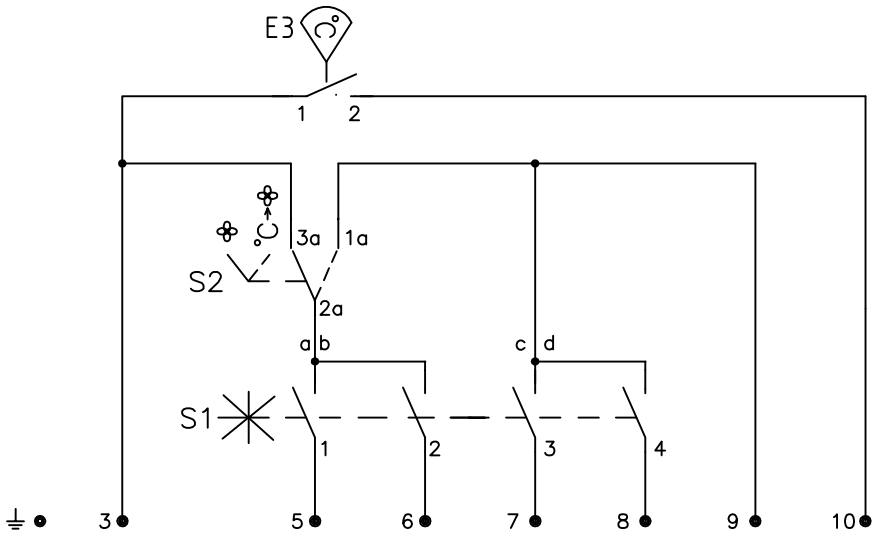

S1	1	2	3	4
0				
∞	X			
∞ ◑	X		X	
∞ ●	X		X	X
✿ ●		X	X	X
✿ ◑		X	X	
✿		X		

This drawing is property of EL–Björn AB. May not be copied, shown or distributed without our written permission

EL-BJÖRN

Box 29 S-334 21 Anderstorp Sweden
Tel +46(0)371-588100 Telefax +46(0)371-18134

TYP/ TYPE

OKTB 55–2

ARTIKELNR./ ARTICLE NO.	MÄRKSTRÖM/ CURRENT RATING	MEASURING EQUIPMENT		FAST ANSLUTNING/ FIXED CONNECTIONS		UTTAG/ OUTGOING CONNECTIONS									JFB/ RCCB			VIKT/ MASS
						CEE–OUTLETS 3–POLE/230V				SCHUKO OUTLETS 2–POLE/230V	CEE–OUTLETS 5–POLE/400V							
	A	CURR.– TRAFO– SPACE	ENERGY– METER– SPACE	≤125A	>125A	16A	32A	63A	125A	16A	16A	32A	63A	125A	≤0,03 A	>0,3A A	>0,03 & ≤0,3 A	kg
E8752072	230																	1

FRONTRITNING	RITN./DRAWING S52072	UTGÅVA/ISSUE
OMKOPPLINGSBOX	DRAWN BY JOCA	SHEET 1
DATE 101027	SIGN.	NEXT SHEET –