VL 2238 5631

Document no. **34 OTP 16H3 C**

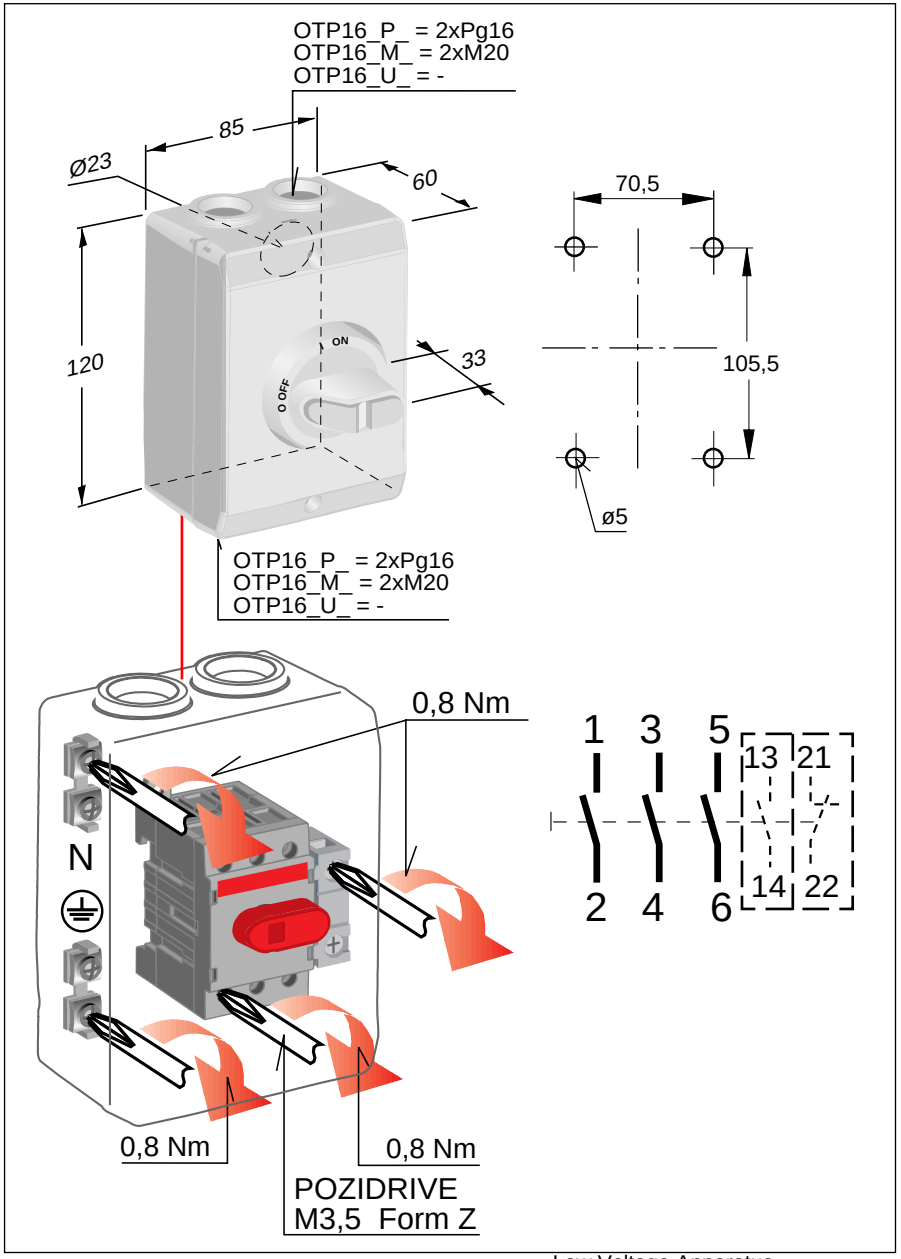

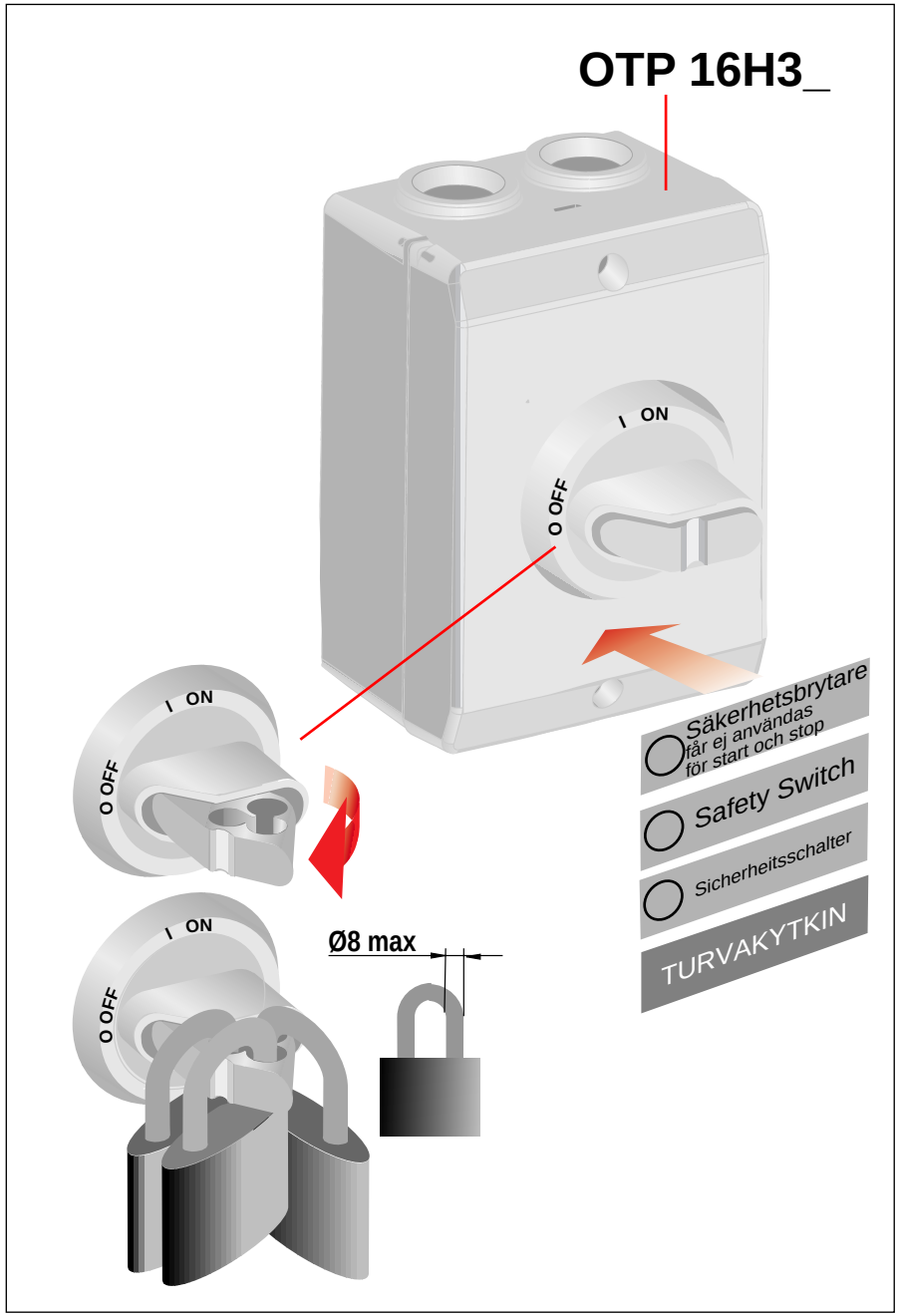

ABB Control Oy

Low Voltage Apparatus
P.O. Box 622 Telephone +358 10 224 000
FIN-65101 Vaasa Telefax +358 10 224 5708
Finland

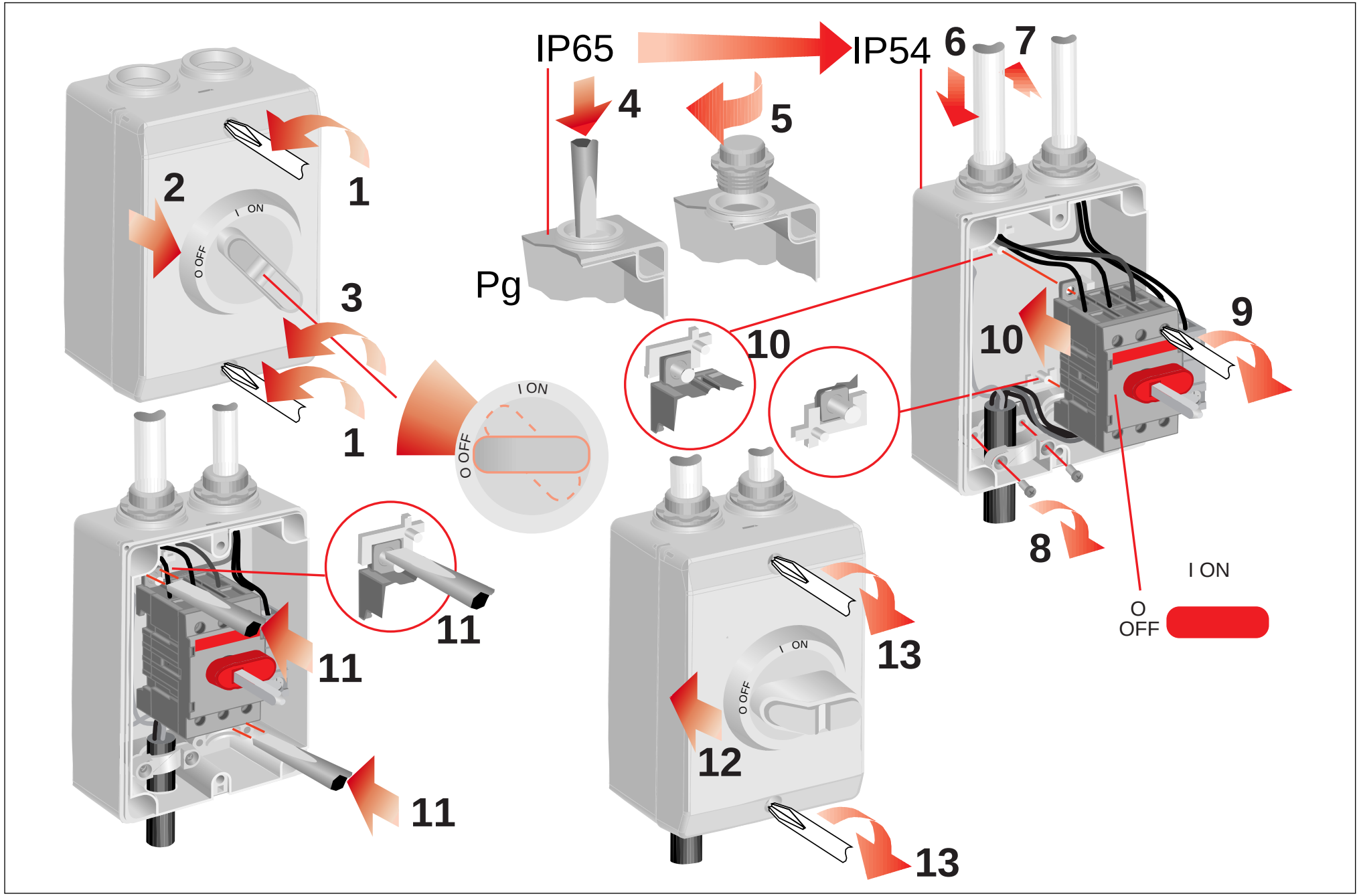
IP65
IP54
Pg
1
2
3
4
5
6
7
8
9
10
11
12
13
I ON
O OFF
I ON
O
OFF