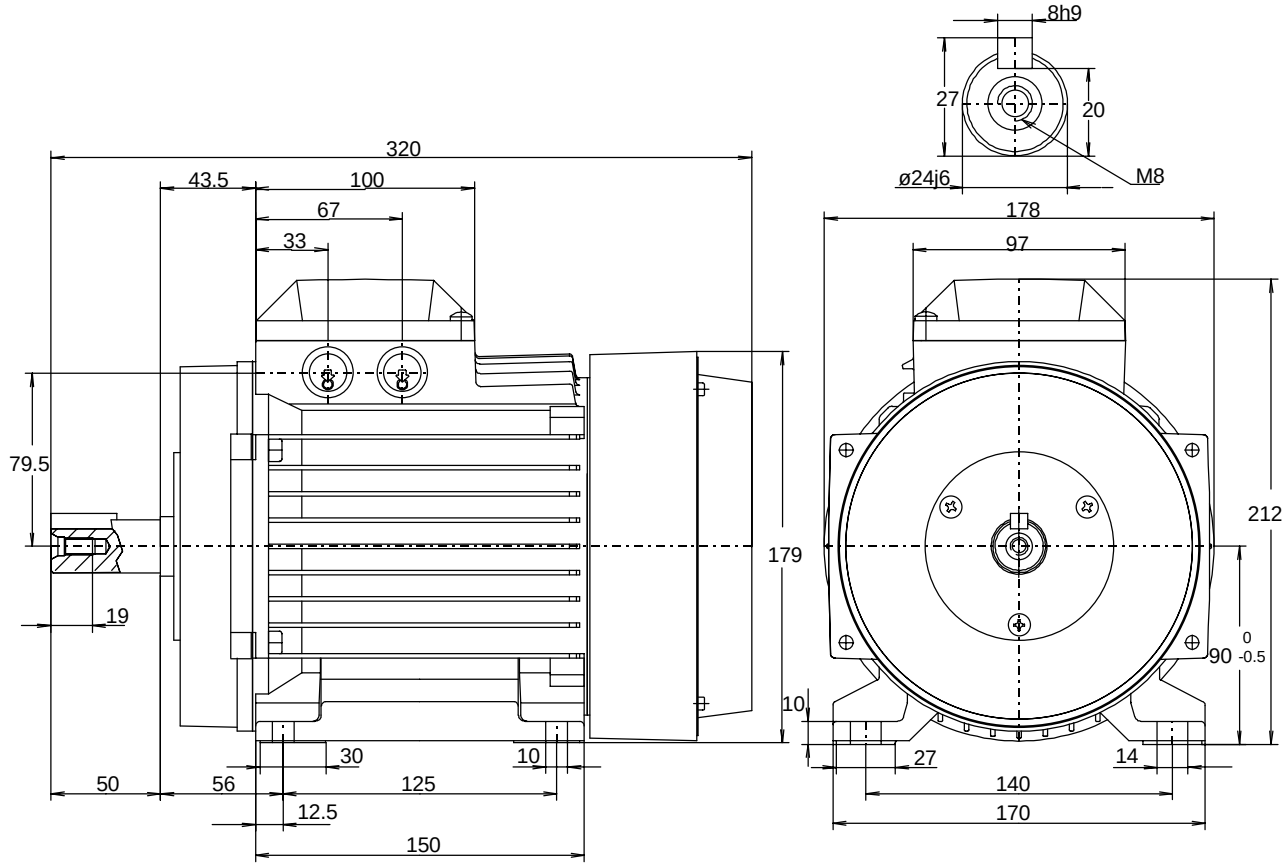

Motor Dimension Print	Motor Type: M2AA 090L IM 1081	Document No: ZD1951351-C A1.0696

Description: **Three phase motor, foot mounted**

Unit:	ABB Motors A/S, Denmark	Issued by:	MD/H. B. Jensen	Replaces:	
Date:	97-01-21	Approved by:	MD/N. M. Jensen	Replaced by:	

ABB Motors

Customer Reference: