SMART 150

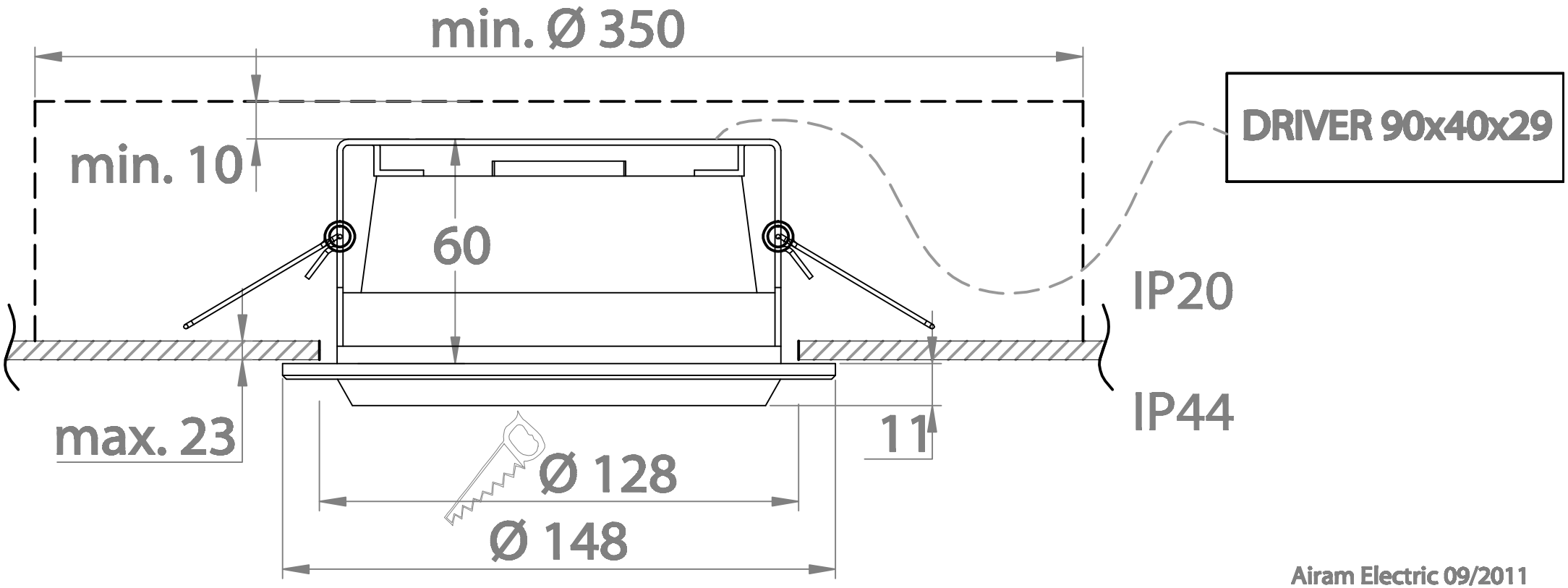

Airam Electric 09/2011