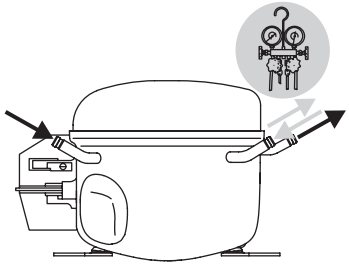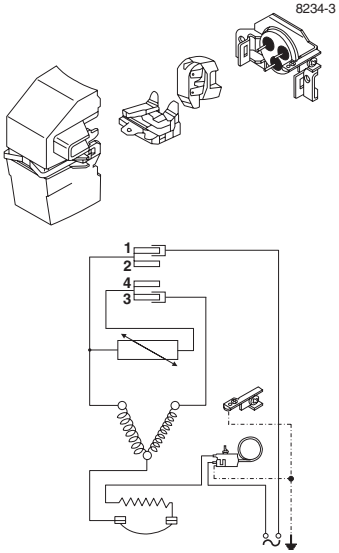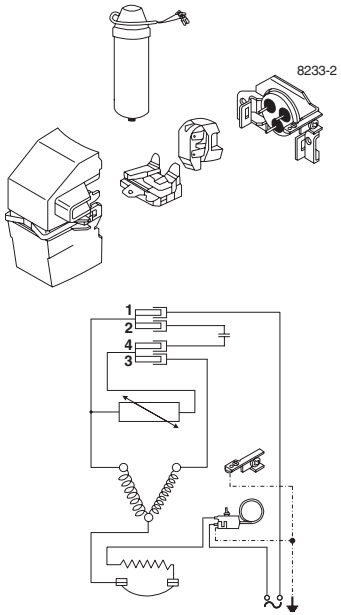TT Compressors