Vsak prenos tretjim osebam in uporaba v nedogovorjene namene ni dovoljen.
This document must not be copied without our written permission and/or transferred to a third party for any unauthorized purpose.

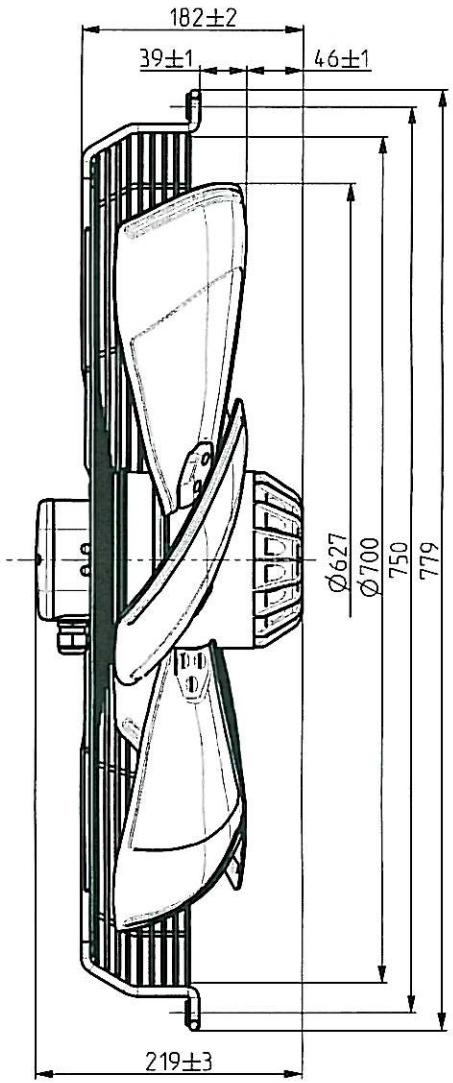

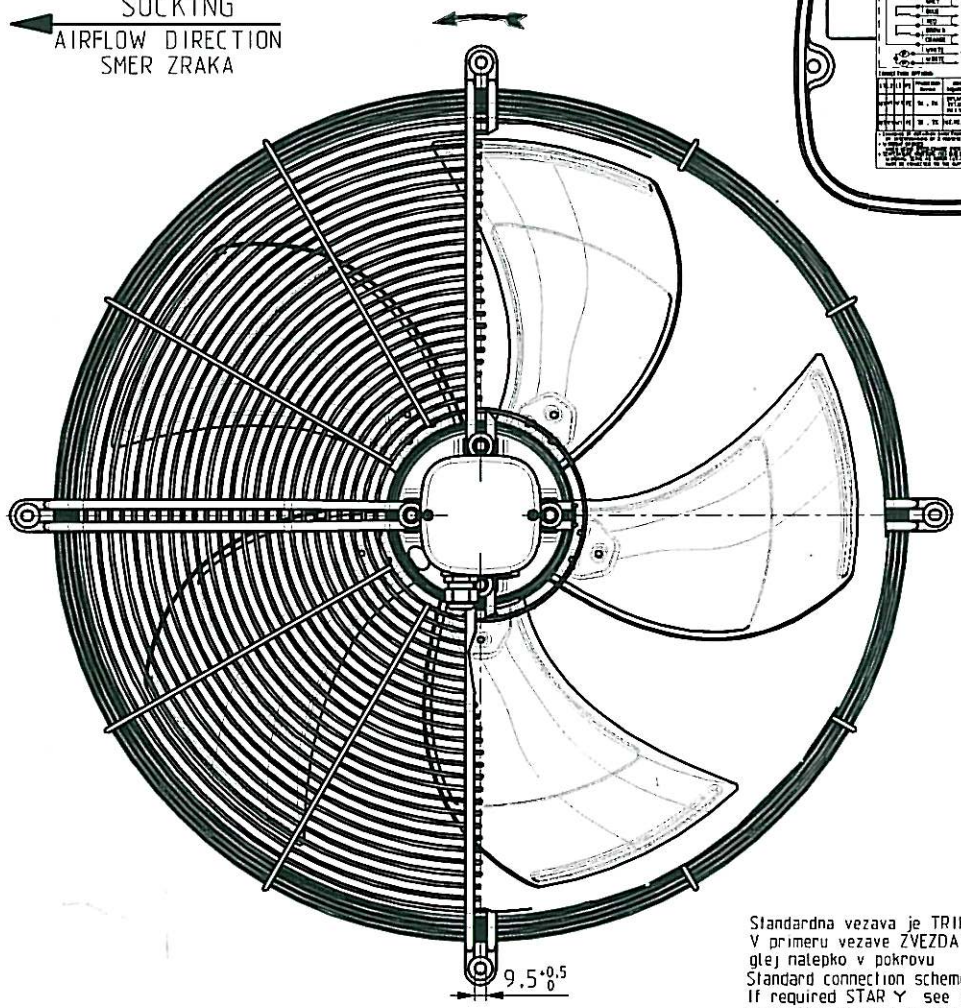

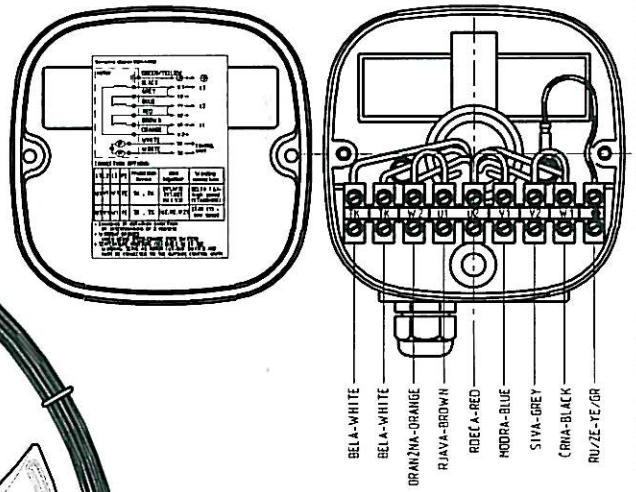

Standardna vezava je TRIKOT △
V primeru vezave ZVEZDA Y
glej nalepko v pokrovu
Standard connection scheme is DELTA △
If required STAR Y see the
connection diagram in the cover

Connecting diagram 0301-1-0033

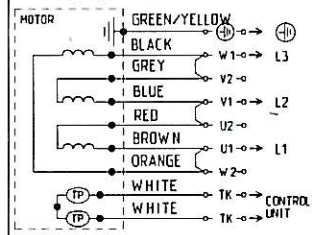

CONNECTION OPTIONS.

L1	L2	L3	PE	Protection device	Join together	Winding connection
U1	V1	W1	PE	TK . TK	(U1.W2) (V1.U2) (W1.V2)	DELTA (Δ)- high speed (STANDARD)
U1	V1	W1	PE	TK . TK	(U2.V2.W2)	STAR (Y) - low speed

- CHANGING OF ROTATION DIRECTION BY INTERCHANGING OF 2 PHASES!
- WITHOUT BRIDGES WHEN USING SPEED-CHANGE OVER SWITCH!
- TEMPERATURE MONITORS (TK) BUILT IN TO THE WINDING. SERVE AS MOTOR CUT-OUT SWITCH AND MUST BE CONNECTED TO THE OUTSIDE CONTROL UNIT!

Opombe:
VENTILATOR NEBARVAN
Not coloured fan

Vzmetna ploščica na kabelski strani
- navodilo za kontrolo ventilatorja 0301-1-4376
- checking instructions 0301-1-4376

HEF MADE IN SLOVENIA CE DATE

R13R-6330HA-6T2-7040
400V D/Y 50Hz 600/380W 1.25/0.65A
870/640RPM cos fi 0.70 IP54 INS.CL.F TH.PROT.
ROT. 0313-4-1025

ST.	ST.SPR.	DATUM
3	289/06	02-11.
2	070/06	15-Mar
1	206/05	26-Oct-.

ROTOMATIK

NORDICOLD

NETOLERIRANE MERE / UNTOLERANCED DIM. ISO 2768-m

DATUM	PODPIS
Nov-2004	Uroš K.
Nov-2004	Jure L.

MERILO/FORMAT 1:4 / A3

MATERIAL

NAZIV: TITLE: VENTILATOR Hef R13R-6330HA-6T2-7040

KODA: CODE: 0313-4-1025

VERZIJA: REV:

LIST: SHEET 1 OD: OF 1