INDICATIVE PRODUCT IMAGE

Product file

Code	RDF3250ED
Range	RDF
Model	Ceiling unit c. dual air flow
Application	MBP
PED	0
Rows number	4
Total surface	12.6 m²
Defrosting (Watt)	2500 W
Net weight	28.9 kg
Inlet connection	12 mm - 1/2" sae
Outlet connection	18 mm
Drain connection	1" Gas (33mm)
Fin spacing	4,5 / 9
Circuit volume	3.73 dm³

Fan-motor

Type	Shielded poles
Fan-motors no.	3
Diameter	254 mm
Power supply	220-240/1/50-60
High speed	1300 rpm
Power consumption	180 W
Current consumption	1.5 A
Air flow	1621 m³/h
Air throw	2X8 m

Technical data - RDF3250ED

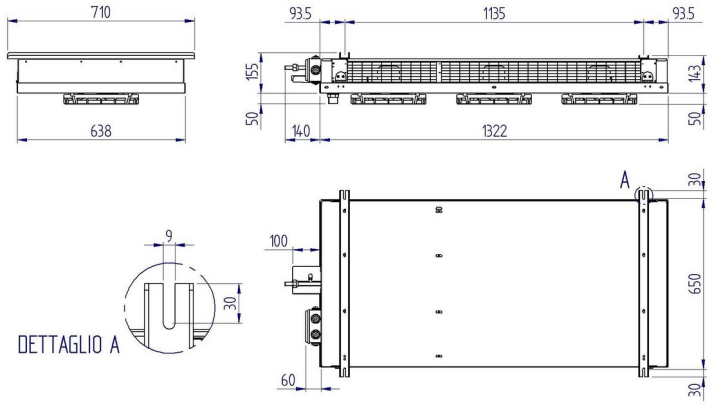

Refrigerating capacity table (W) - RDF3250ED

High speed - RDF3250ED

ΔT \ Cold room Temp	-40 °C	-35 °C	-30 °C	-25 °C	-20 °C	-15 °C	-10 °C	-5 °C	0 °C	2 °C	4 °C	6 °C	8 °C	10 °C	12 °C	15 °C
5 K	1007 (1)	1131 (1)	1226	1302	1387	1473	1577	1701	1853	1881	1919	1967	2033	2109	2195	2323
6 K	1159 (1)	1321 (1)	1463	1587	1682	1796	1910	2052	2233	2271	2318	2366	2413	2499	2584	2712
7 K	1292 (1)	1492 (1)	1691	1834	1957	2090	2233	2394	2584	2622	2651	2708	2774	2860	2955	3097
8 K	1416 (1)	1644 (1)	1872	2062	2223	2385	2546	2736	2955	3002	3050	3088	3154	3268	3363	3506
9 K	1511 (1)	1767 (1)	2033	2261	2489	2660	2850	3059	3306	3373	3430	3477	3534	3658	3762	3919
10 K	1606 (1)	1872	2176	2470	2708	2907	3135	3373	3648	3715	3791	3848	3914	4009	4142	4342

(1) Application outside the recommended range

Values refered to :
Gas R449A Mid

INDICATIVE PRODUCT IMAGE

General features

- RDF range unit coolers have been designed to be installed inside cold rooms suited for fresh and frozen goods storage
- The main feature of this range is of throwing air from both sides; this allow the unit cooler to be placed in the middle of the cold room ceiling giving a uniform air flow and, as a result, the best product conservation
- RDF range is available in two different fan diameters and three types of fin spacing according to the needed application
- The ED version is supplied with mounted defrosting heaters and is suitable for being used at low temperature applications
- The range consists of two types of coils , both made of aluminium fins and copper tube: 3/8” tube size with a geometry of 25 x 21,65, for models with 250 mm fan diameter
- The model types having 250 mm fan diameter are fitted with a coil of 4,5 mm / 9 mm fin spacing, suited for applications with a cold room temperature (Tc) from –30°C to +10°C
- The coils are tested with nitrogen at a pressure of 25 bar.
- The fan motor models in use have the following features:
- Manufactured following EN 60335-1 laws, with internal thermal protection
- Fan diameter 250mm
- Power supply 230-240V/1/50-60Hz
- IP42 protection rate
- Operating temperature from -40°C to +40°C
- B insulation class
- Electrics made in conformity with 2006/95/CE Low Tension directive
- The housing is made of aluminium
- The manufacturing solutions used give the housing strength and guarantee the absence of vibrations during the functioning.
- Screws, washers and nuts are made of stainless steel